DRAWING NO.
SC091657-01

REV	DATE	DESCRIPTION	ECO	BY	C'H'K.
L	2019-09-05 01:00:00 EDT	UPDATED AS PER FOCUS REQUEST FPN1905022	51408	JL	BE

COPPER CONDUCTOR ACCOMMODATED		CAT. NO. 5 7 9 10	H 3	J DIA.	L	W	T 3	TORQUE	
AWG	METRIC WIRE SIZE							Lb*in	N*m
8 SOL(.129 DIA.) - 4 STR(.232 DIA.)	[10mm^2 SOL(3.58)- 16mm^2 STR(5.13)]	GB4C	1.49 [38]	3/8-16	.88 [22]	1.06 [27]	1/4"	240	27.0
4 SOL(.204 DIA.)- 2/0 STR(.418 DIA.)	[25mm^2 STR(6.48)- 70mm^2 STR(10.9)]	GB26	1.74 [44]	3/8-16	.94 [24]	1.42 [36]			
		GB26G3 11							
		GB26SSTN 12							
2/0 SOL(.365 DIA.)- 250 KCMIL(.575 DIA.)	[70mm^2 STR(10.9)- 120mm^2 STR(14.4)]	GB29	2.32 [59]	1/2-13	1.25 [32]	1.88 [48]		480	54.1
2/0 SOL(.365 DIA.)- 250 KCMIL(.575 DIA.)	[70mm^2 STR(10.9)- 120mm^2 STR(14.4)]	GB29TNGSHDWR 6	2.32 [59]	1/2-13	1.25 [32]	1.88 [48]			
300 KCMIL(.630 DIA.)- 500 KCMIL(.814 DIA.)	[150mm^2 STR(16.0)- 240mm^2 STR(20.3)]	GB34	2.57 [65]	1/2-13	1.38 [35]	2.31 [59]			
550 KCMIL(.855 DIA.)- 750 KCMIL(.998 DIA.)	[300mm^2 STR(22.6)- [300mm^2 STR(22.6)	GB39	3.28 [83]	5/8-11	1.75 [45]	2.75 [70]		660	75
800 KCMIL(1.031 DIA.)- 1000 KCMIL(1.152 DIA.)	[400mm^2 STR(26.1)- 500mm^2 STR(28.3)]	GB44	3.28 [83]	5/8-11	1.75 [45]	3.16 [80]		660	75

TABLE A

TABLE B

SUFFIX (T)	T	H ADJUST
T2	.25	0.00
T4	.50	0.25
T6	0.75	0.50
T8	1.00	0.75
T10	1.25	1.00
T14	1.75	1.50

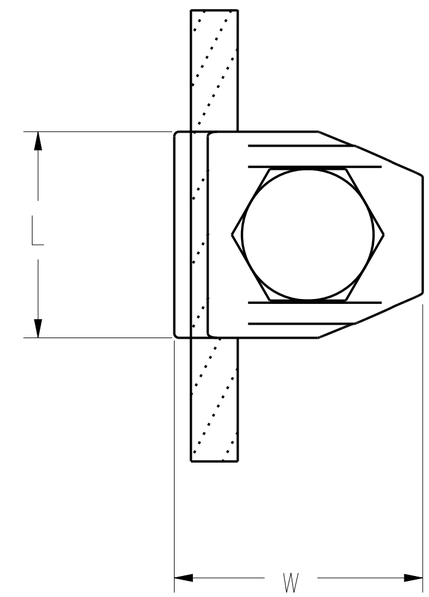

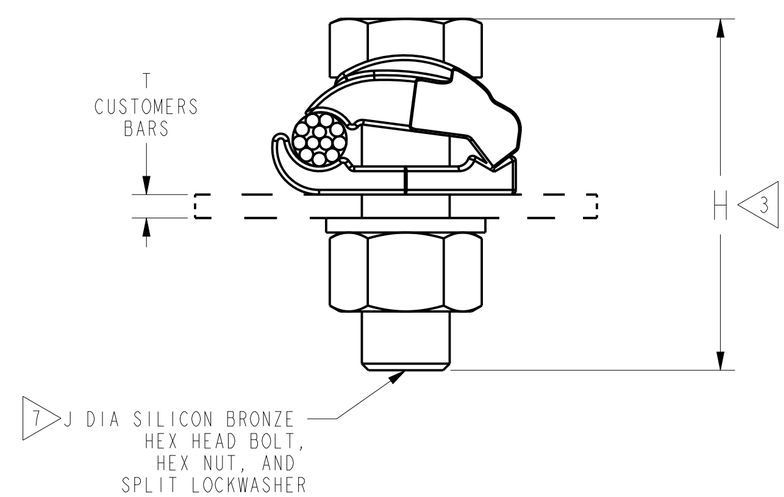

NOTES:

1. MATERIAL: CAST COPPER ALLOY.
2. DIMENSIONS IN BRACKETS [ ] ARE IN MILLIMETERS ROUNDED OFF TO THE NEAREST MILLIMETER, UNLESS OTHERWISE NOTED, AND ARE FOR REFERENCE ONLY.
3. FOR BAR THICKNESS FROM 1/4" TO 1 1/4" ADD THE SUFFIX "T" FROM TABLE B TO THE CATALOG NUMBER.
4. T2 SHOWN IN TABLE FOR REFERENCE ONLY, T2 NOT TO BE INCLUDED IN CATALOG NUMBER.
5. FOR TIN PLATED PRODUCT ADD A "W" TO THE END OF THE CATALOG NUMBER (EXGB34W OR GB34T6W)
6. CAP & BODY FINISH TO BE TIN PLATED HARDWARE FINISH TO BE GALVANIZED STEEL. NOT UL LISTED.
7. FOR GALVANIZED STEEL HARDWARE,ADD SUFFIX"-GS.
8. UL 467 LISTED, FILE NO. E9999. ACCEPTABLE FOR DIRECT BURIAL IN EARTH OR CONCRETE, CSA 22.2 NO. 41 LISTED, FILE NO. 42862.
9. FOR TIN PLATED PRODUCT AND HARDWARE ADD A "TN" TO THE END OF THE CATALOG NUMBER
10. SUFFIX CB1 INDICATES BOX QTY 100.
11. SUFFIX G3 DENOTES TIN PLATED BODY AND UNPLATED HARDWARE
12. SUFFIX SS DENOTES STAINLESS STEEL HARDWARE

TO ORDER BURNDY® PRODUCTS CALL

UNITED STATES:
1-800-346-4175 (LONDONDERRY, NH)

CANADA:
1-800-361-6975 (QUEBEC)
1-800-387-6487 (ALL OTHER PROVINCES)

FOR PRODUCT INFO: http://www.burndy.com

GROUND CONNECTOR

ITEM NO: N/A

CAT. NO: GB--(TABLE)

DRAWN BY:	HC	09/17/85
CHECKER:	CAR	09/25/85
DSN APPVL:	MJM	10/15/94
MFG APPVL:	--	--
QA APPVL:	E.VARGAS	04/13/18
MKT APPVL:	K. WOO	11/11/93

BURNDY

SCALE: 2:1

PROD FAM: --
PROJECT #: --
DOCUMENT TYPE: Sales
REL LEVEL: Released

SIZE: C

DRAWING NO: SC091657-01

REV: L

SHEET 1 OF 1

REV: PE0200